Crutch Holder

Assembly Guide for Rollators

WAA695611 - Crutch & Cane Holder

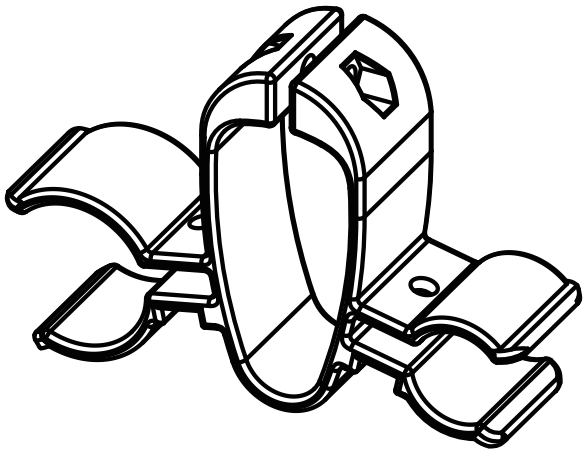

Upper Holder

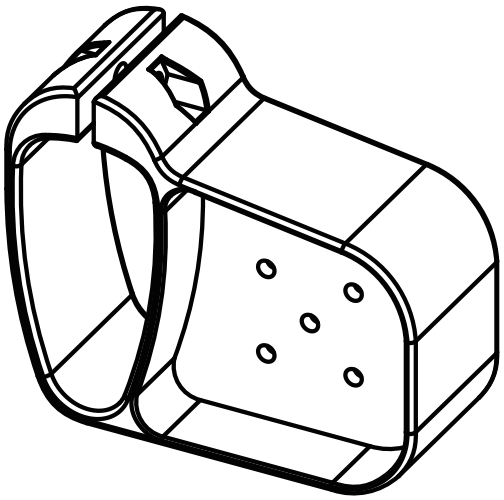

Lower Holder

ASSEMBLY PARTS

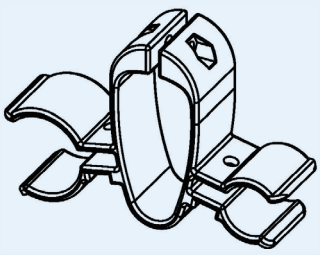

Upper Holder

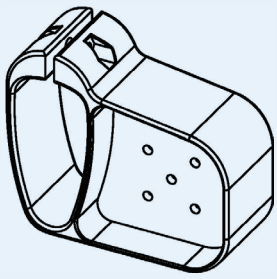

Lower Holder

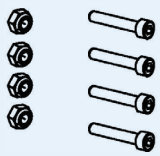

4 x Bolt

4 x Nuts

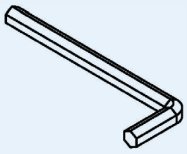

Allen Key

1 Push both brake levers down to lock the brakes.

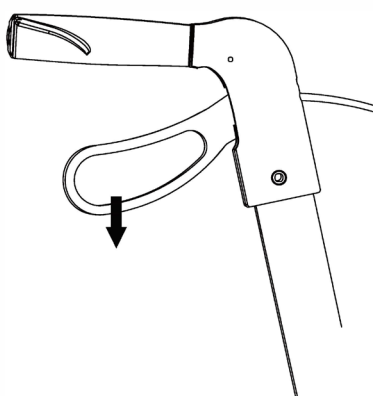

2 Position the holders on the walker frame.

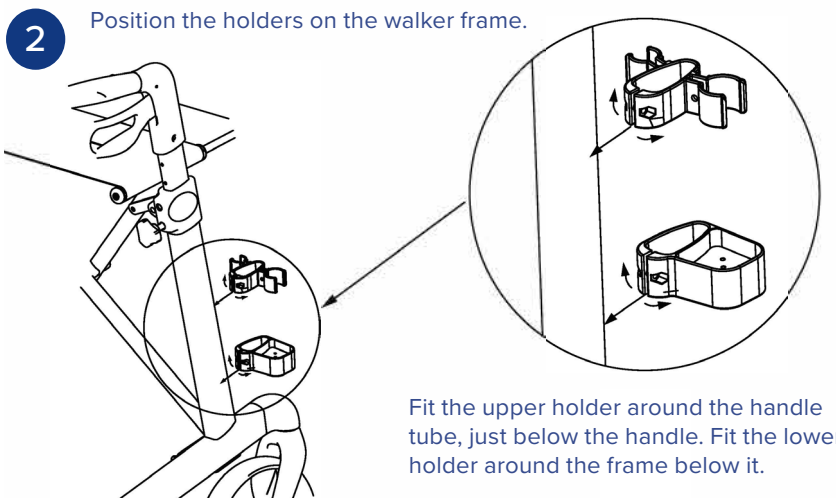

Fit the upper holder around the handle tube, just below the handle. Fit the lower holder around the frame below it.

3 Both holders fitted on the frame.

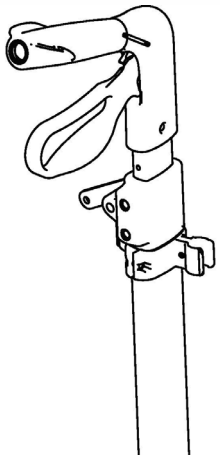

Slide both holders up so the lower holder sits directly under the upper holder.

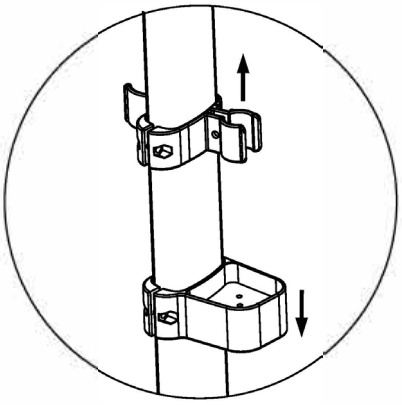

4 Fit the two M4x14 bolts and nuts to the upper holder, and the M4x16 bolt and nut to the lower holder. Tighten with the Allen key.

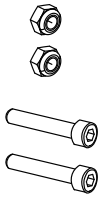

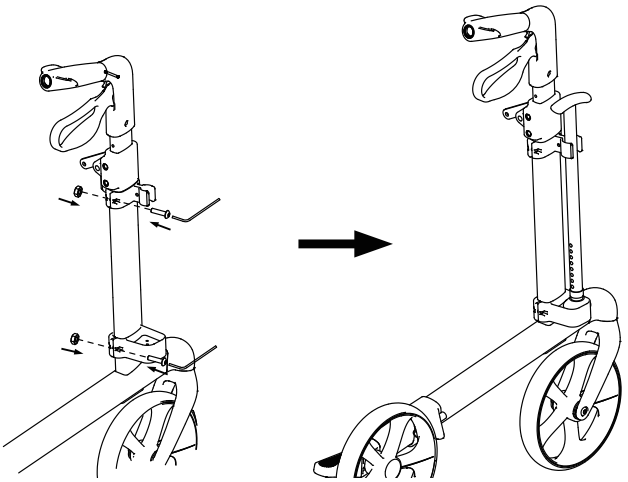

Place the cane or crutch tip in the lower holder and the shaft in the upper holder.

191026